

RSK 7113527

The Duschbrunn 50 Vertical floor drain has a 50mm vertical outlet and a total height of 98mm. It is suitable for installation in wooden joists or concrete floors. The Duschbrunn floor drain comes complete with a removable water trap, clamping ring and plastic grate. It also comes with a protective cover that is intended to prevent any concrete or debris from entering the drain during installation.

The automatic self-adjusting clamping ring is used for both waterproofing membranes and vinyl flooring with a thickness of 1.5mm to 2mm.

Specifications

RSK Number	7113527
Dimension	Ø50 mm
Floor Construction	Concrete/Wood
Floor Covering	Concrete/Resin/Tiles/Vinyl
Function	Bottom outlet
Item Color	White
Material	ABS
Pressure Flow Temp	1,6 l/s
Size	Ø150 mm

Version	With plastic grating

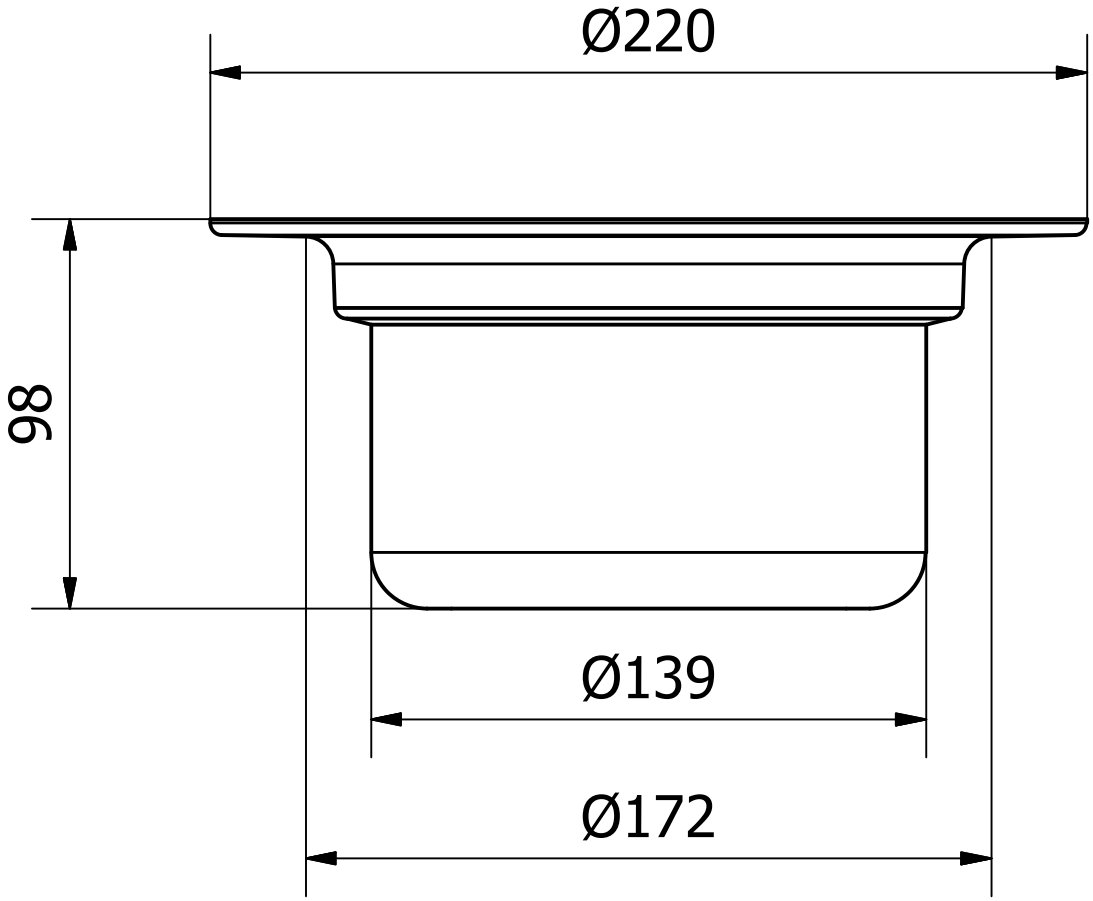
Ø220
98
Ø139
Ø172