

RSK 7113770

The Freja 50 Side floor drain has a 50mm side outlet and a low total height of 99mm. It is suitable for installation in wooden joists or concrete floors. The Freja floor drain comes complete with a removable water trap, clamping ring and plastic grate. It also comes with a protective cover that is intended to prevent any concrete or debris from entering the drain during installation. The floor drain is manufactured in weldable PEH plastic.

The automatic self-adjusting clamping ring is used for both waterproofing membranes and vinyl flooring with a thickness of 1.5mm to 2mm.

Specifications

RSK Number	7113770
Dimension	Ø50 mm
Floor Construction	Concrete/Wood
Floor Covering	Concrete/Resin/Tiles/Vinyl
Function	Side outlet
Item Color	White
Material	PEH
Pressure Flow Temp	0,8 l/s
Size	Ø150 mm

Version	Low built

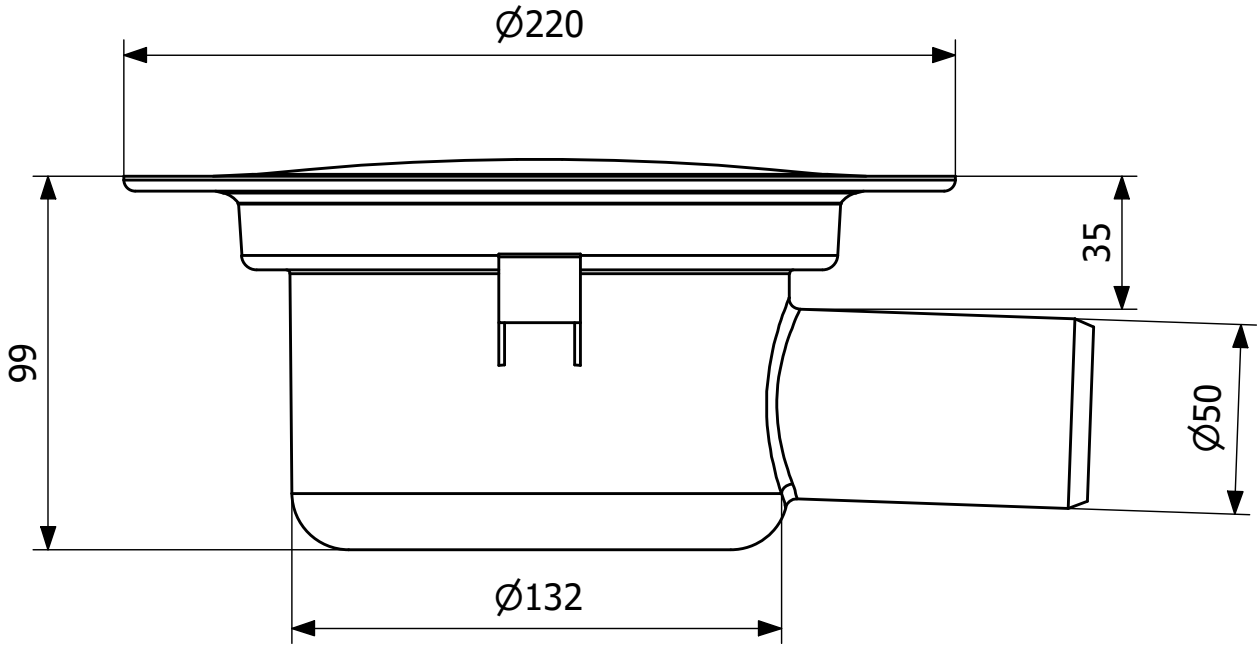
Ø220
35
99
Ø50
Ø132