

RSK 7113764

The Minimax 50 floor drain has a 50mm side outlet and a low total height of 70mm (76mm with falls). It is suitable for installation in concrete floors. The Minimax floor drain comes complete with a removable NOOD water trap, clamping ring and plastic grate. The NOOD water trap is a mechanical trap which closes when there is no water present, thus preventing any foul air from escaping through the drain.

The automatic self-adjusting clamping ring is used for both waterproofing membranes and vinyl flooring with a thickness of 1.5mm to 2mm.

Specifications

RSK Number	7113764
Dimension	Ø50 mm
Floor Construction	Concrete flooring
Floor Covering	Concrete/Resin/Tiles/Vinyl
Function	Side outlet
Item Color	White
Material	PP
Pressure Flow Temp	0,8 l/s
Size	Ø130 mm

Version	With NOOD water trap

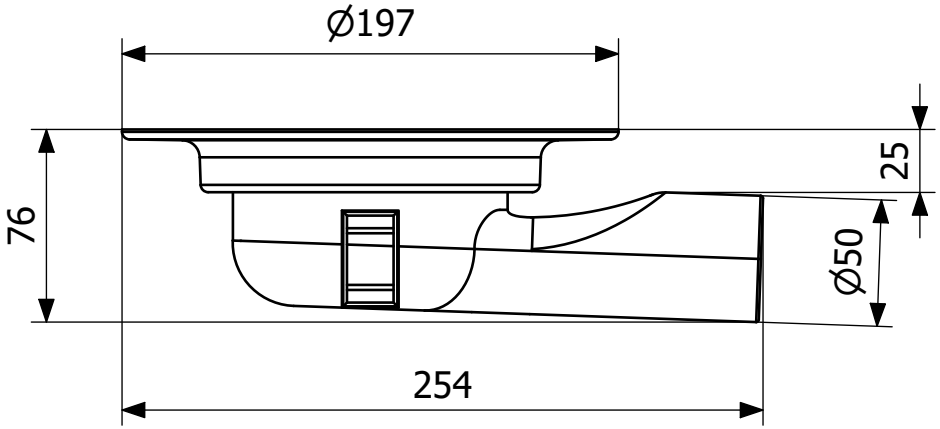
Ø197
76
25
Ø50
254