

RSK 8571980

Shower tray outlet with water trap and chrome lid, designed for 90mm diameter outlet holes. It is suitable for shower trays and shower cublicles. The water trap is a mechanical odour stop designed to close when there is no water flow, thus preventing odours from escaping through the drain, even when dried out. It is therefore suitable for environments which have little or no water supply for longer periods of time. When water is flowing through, the water trap opens automatically.

Specifications

RSK Number	8571980
Dimension	Ø40 mm
Function	For shower tray/shower cabinets
Item Color	White
Material	PP, ABS
Pressure Flow Temp	0,4 l/s
Version	For 90 mm diameter outlet

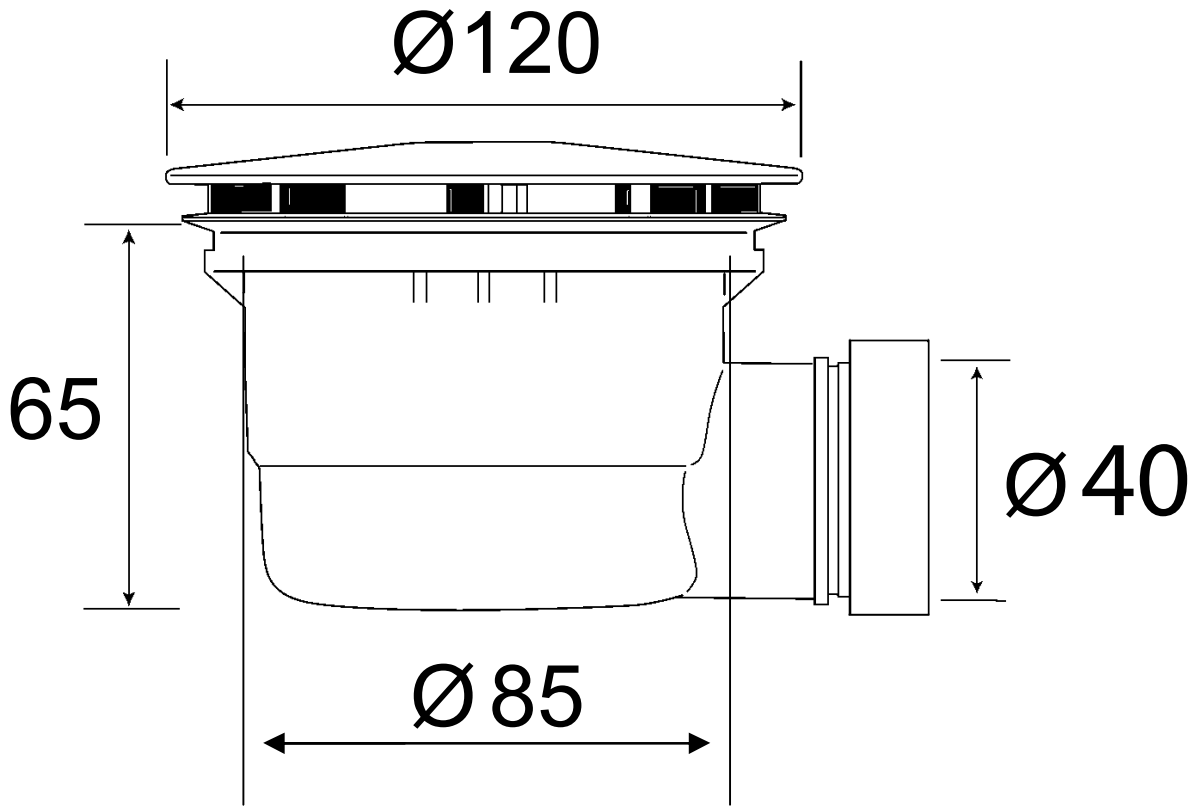
Ø120
65
Ø40
Ø85