

RSK 2710194

Straight pipe socket with 32mm dimension in plastic, with rubber seal at both ends for insertion.

Specifications

RSK Number	2710194
Dimension	Ø32/Ø32 mm
Function	Visible piping
Item Color	White
Material	PP, TPE
Version	Rubber seal, double socket

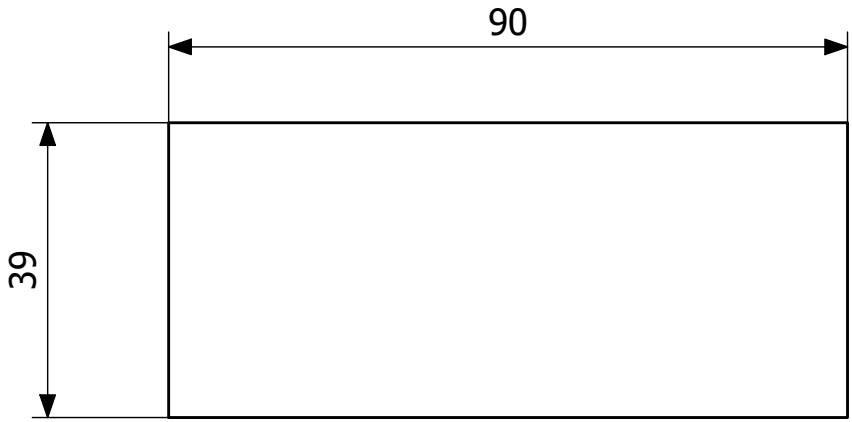
90
39

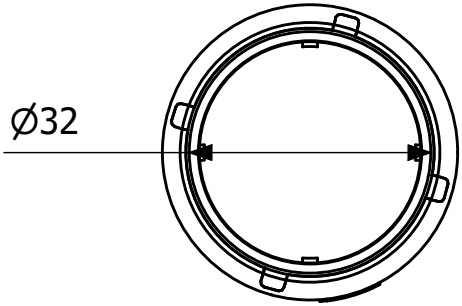
Ø32