PURUS



RSK 2710195

Straight pipe socket with 40mm dimension in plastic, with rubber seal at both ends for insertion.

Specifications

RSK Number	2710195
Dimension	Ø40/Ø40 mm
Function	Visible piping
Item Color	White
Material	PP, TPE
Version	Rubber seal, double socket

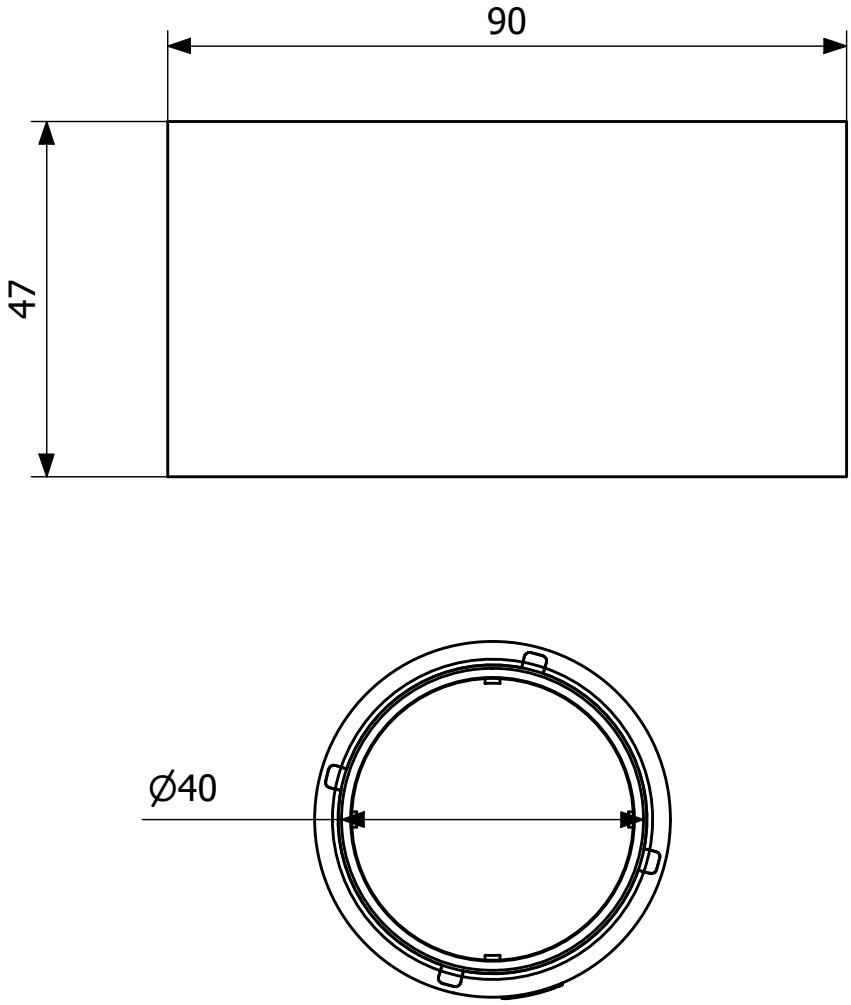
90
47
Ø40