

RSK 3032540

Standard couplings are used to connect two waste water pipes with the same dimension, as well as waste water pipes with the same or different materials and surface structure. Standard couplings are suitable for vertical and horizontal installation. They have two sides, both with hose clamps for external installation of waste water pipes. They are easy to install in a few minutes and are approved for concealed placement. The material is UV-resistant.

Specifications

RSK Number	3032540
Dimension	120-137 mm
Function	Transition seal outside
Item Color	Black
Material	EPDM, Acid-resistant stainless steel 1.4404
Pressure Flow Temp	0,6 bar
Version	Type approved for consealed installation

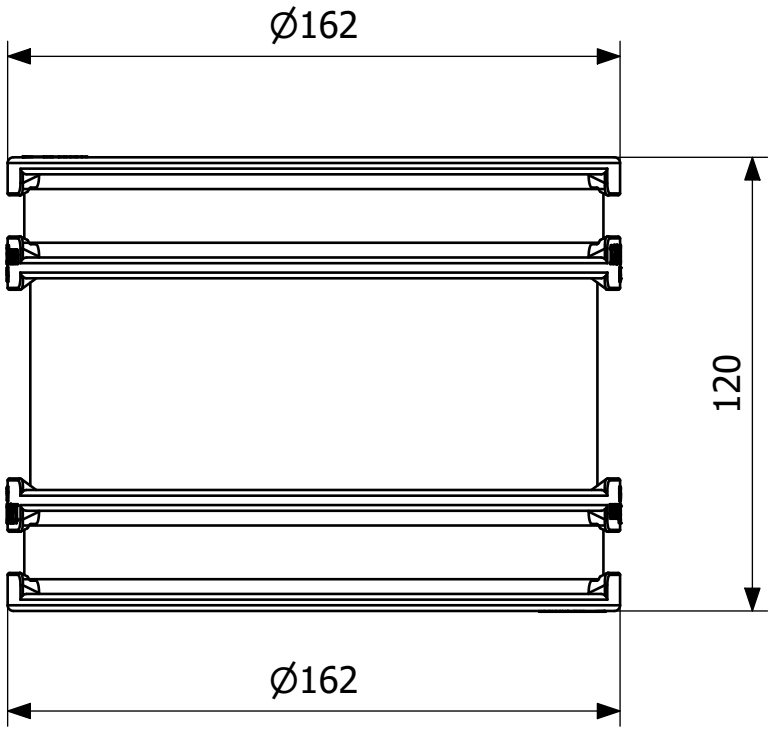
∅162
120
∅162