

RSK 7991051

V345 Wall urinal is manufactured in acid-resistant stainless steel. It is designed for wall installation and has a connection for 40mm diameter outlet pipes. The urinal comes with a PUM membrane and strainer. It is durable and is practical for environments where strength and hygiene is a priority, for example schools, industrial settings and sports and leisure facilities.

## Specifications

| | |
|---|---|
| **RSK Number** | 7991051 |
| **Dimension** | G15 |
| **Function** | Wall hung |
| **Item Color** | Stainless |
| **Material** | Acid-resistant stainless steel 1.4404 |
| **Surface** | Polished |
| **Version** | With brackets |

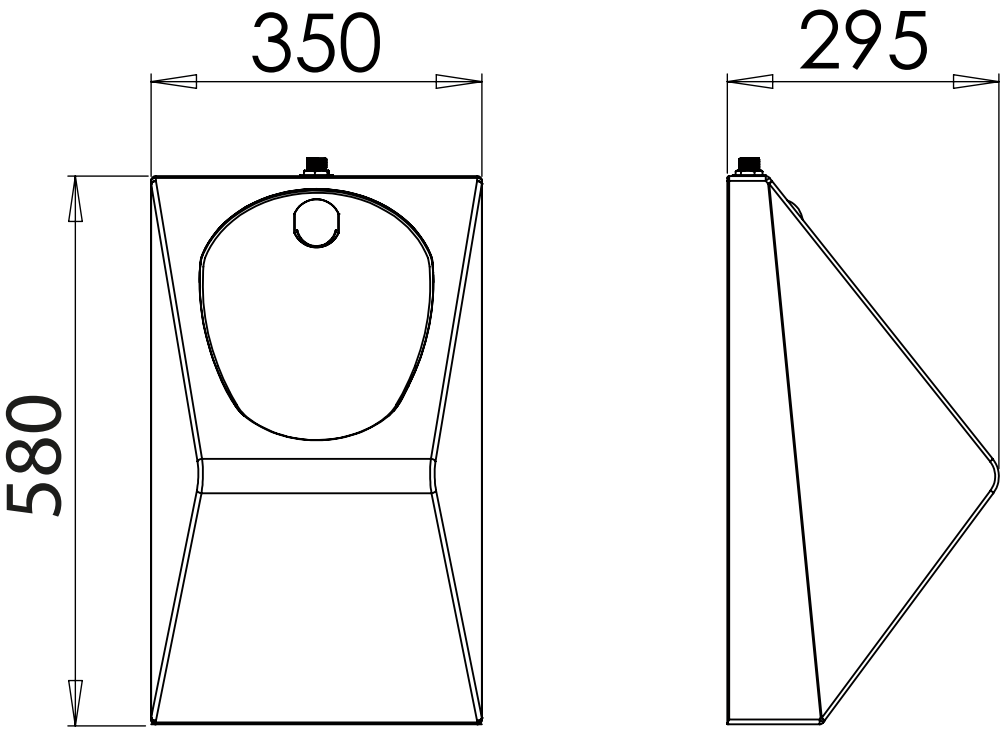
350
295
580