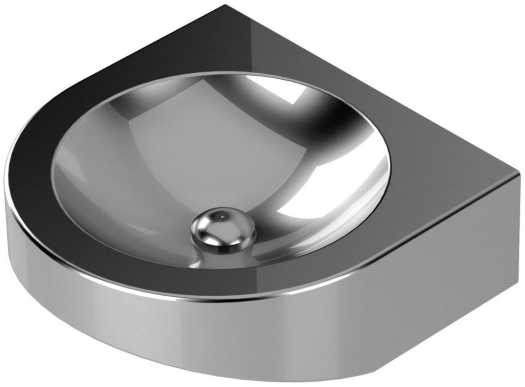

RSK 7631214

V214 Wash basin in stainless steel. It is suitable for wall installation and has a G32 connection. The V214 Wash basin comes with a vertical waste, strainer and threaded rods for installation. It is durable and is practical for environments where strength and hygiene is a priority, for example schools, industrial settings and sports and leisure facilities.

RSK 7631218

V219 Wash basin for disability access in stainless steel. It is suitable for wall installation and has a G32 connection. The V219 Wash basin comes with a vertical waste, strainer and threaded rods for installation. It is durable and is practical for environments where strength and hygiene is a priority, for example schools, industrial settings and sports and leisure facilities.

Specifications

RSK Number	7631214
Dimension	G32
Function	Wall hung
Item Color	Stainless
Material	Stainless steel 1.4301
Size	360x150x390 mm
Surface	Brushed

RSK Number	7631218
Dimension	G32
Function	Wall hung
Item Color	Stainless
Material	Stainless steel 1.4301
Size	400x130x390 mm
Surface	Brushed

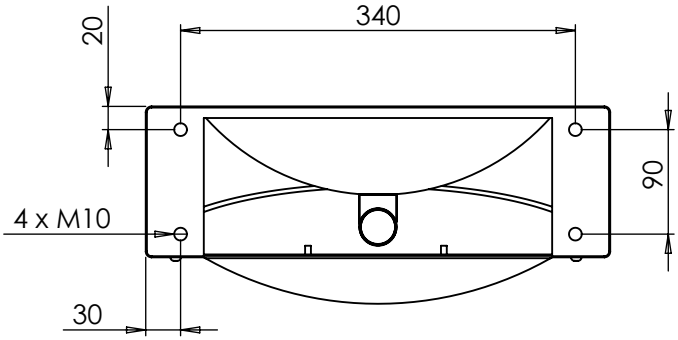
20
340
90
4 x M10
30

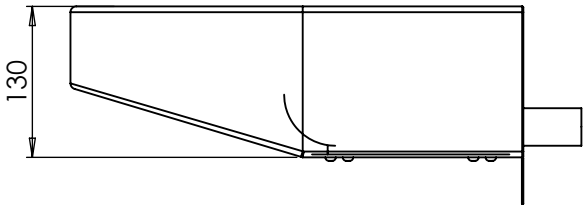
130

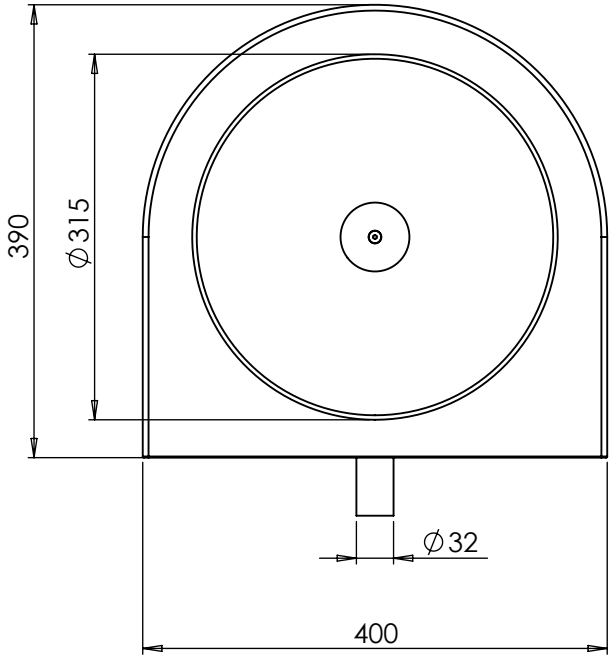
390
Ø315
Ø32
400

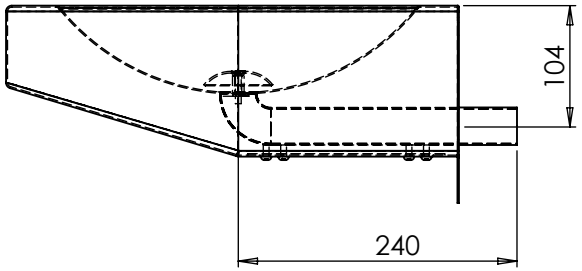
104
240