

RSK 8573701

This waste outlet is a plastic vertical outlet for wash basins with a G32 connection. The waste outlet comes with a stainless steel strainer and does not have a connection for an overflow.

Specifications

RSK Number	8573701
Dimension	G32
Function	To washbasin
Item Color	White/Stainless
Material	PP, Stainless steel 1.4301
Version	Strainer valve

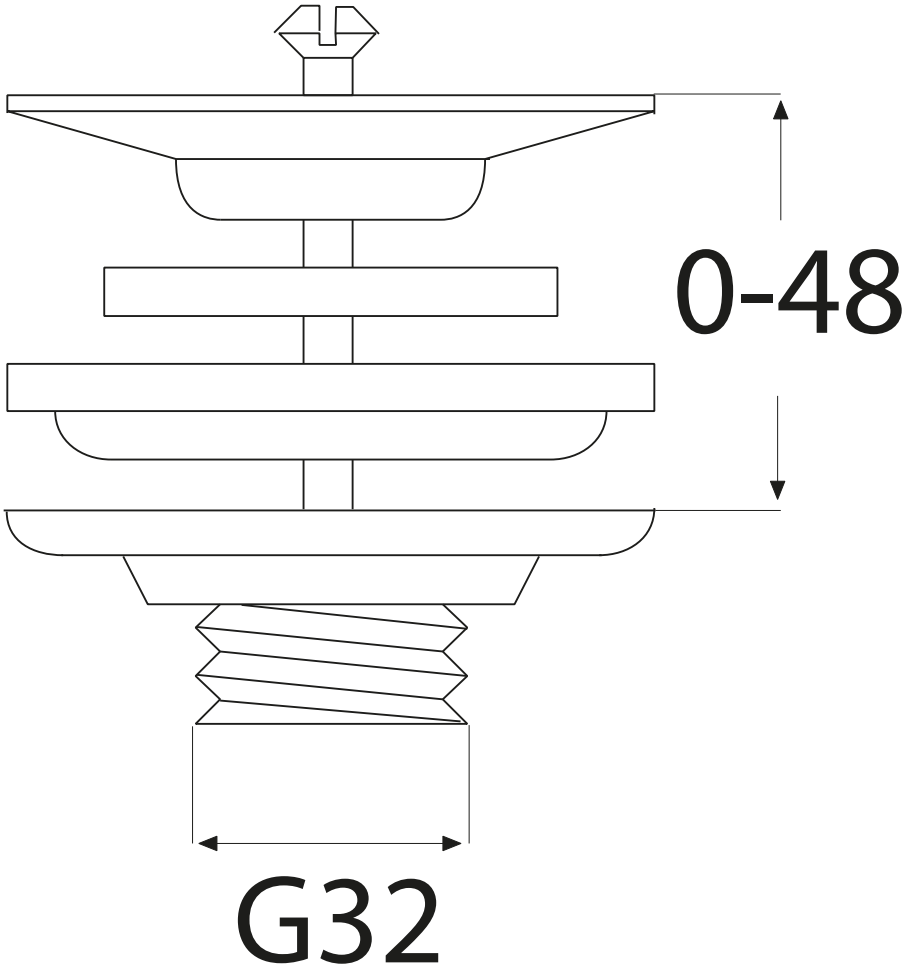
0-48
G32