PURUS



RSK 2910397

WC connector for central connection of WC. Can be connected to both the floor and the wall. Comes with floor cover.

Specifications

RSK Number	2910397
Dimension	Ø110 mm
Function	For wall and floor connection
Item Color	White
Material	EVA & Copolymer, TPE
Size	H=115 mm
Version	Centric with flange

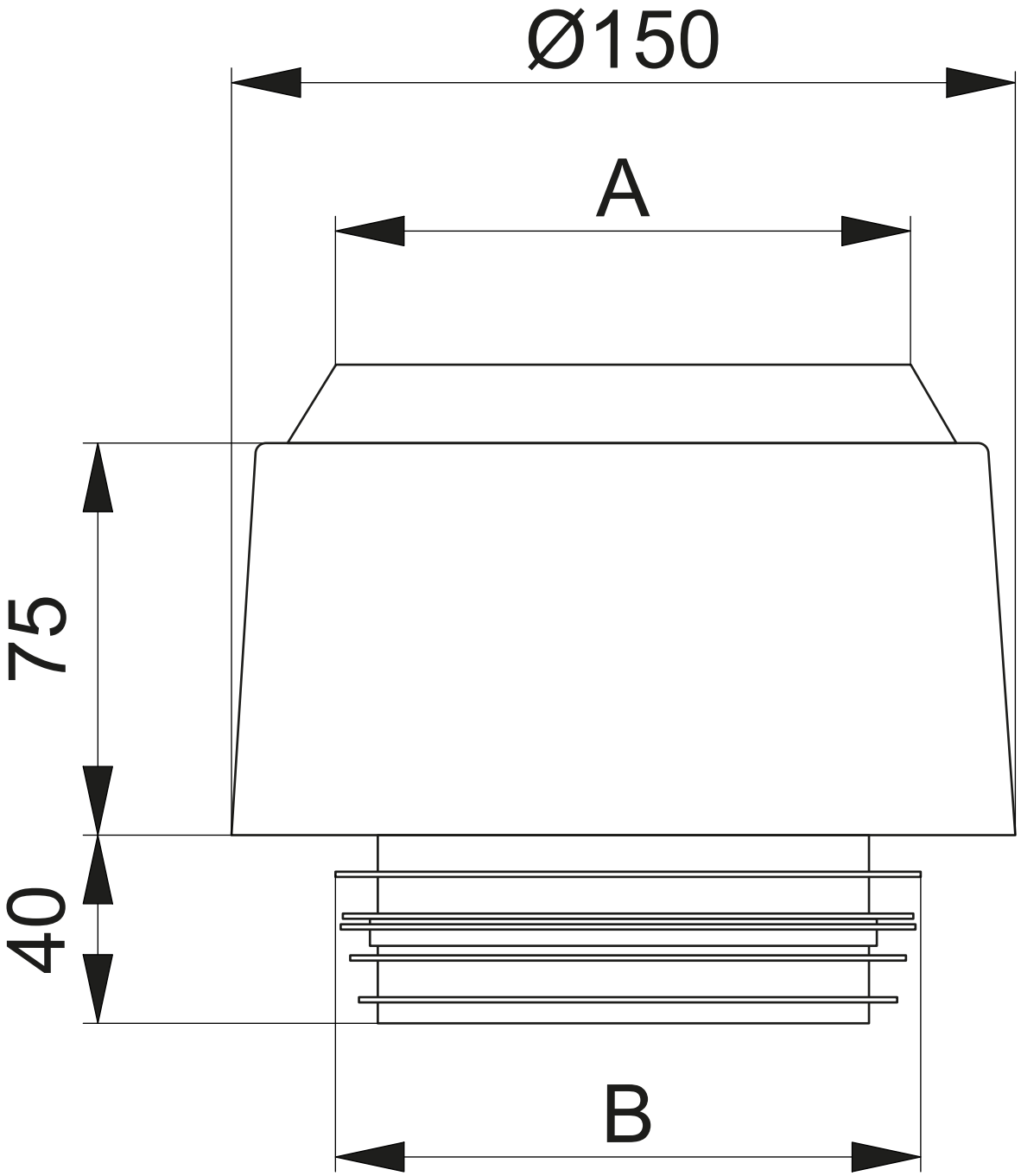
Ø150
A
75
40
B